Secureye

DATASHEET

2MP Network BULLET CAMERA



SP-C2QN-I5WST

Long-range bullet surveillance with integrated audio

2MP network bullet camera designed for clear Full HD monitoring, with IR illumination reaching up to 50 metres, a built-in microphone and flexible network integration.

Features

- Full HD imaging at 1920 × 1080 and up to 30 fps
- IR night viewing up to 50 m, supported by two IR LEDs
- Integrated microphone and two white LEDs with illumination up to 15m
- Metal-and-plastic enclosure with IP67 protection
- Supports S+265, H.265 and H.264-family video compression
- 12 V DC or IEEE 802.3af PoE power options

	SPECIFICATION	
CAMERA & LENS	Image sensor	1/2.7" CMOS
	Minimum illumination	Colour: 0.02 lux @ F1.6 (AGC ON); B/W: 0 lux with IR
	Shutter speed	1s to 1/100,000s
	Day/night mode	Auto-switching IR-cut filter (ICR)
	Smart IR	Supported
	Wide dynamic range	DWDR
	Signal-to-noise ratio	>39dB
	Pan / tilt / rotation	0–360° (P); 0–80° (T); 0–360° (R)
	Lens design	Fixed focal length
	Focal length	4mm
	Lens mount	M12
	Aperture	F1.6, fixed
	Field of view	89.1° (H); 47.7° (V); 102.3° (D)
	DORI Detect	55.1m
	DORI Observe	21.8m
	DORI Recognize	11.0m
	DORI Identify	5.5m
IMAGE & VIDEO PROCESSING	Maximum resolution	2MP, 1920×1080 @ 30fps
	Main stream (PAL)	25fps (1920×1080, 1280×720, 640×480, 704×576)
	Main stream (NTSC)	30fps (1920×1080, 1280×720, 640×480, 704×480)
	Sub stream (PAL)	25fps (704×576, 704×288, 640×360, 352×288)
	Sub stream (NTSC)	30fps (704×480, 704×240, 640×360, 352×240)
	BLC	Supported

	HLC	Supported
	AGC	Supported
	3D digital noise reduction	Supported
ILLUMINATION & COMPRESSION	IR LEDs	2
	IR illumination distance	50m
	IR wavelength	850 nm
	White LEDs	2
	White-light distance	15m
	Video compression	S+265 / H.265 / H.264B / H.264M / H.264H
	Video bit rate	32 kbps–6 Mbps
	Audio compression	G.711A / G.711U / ADPCM_D
	Audio sampling	8 / 32 / 48 kHz
IMAGE CONTROLS	White balance	Auto / Semi-auto / Manual / Sunshine / Nature light / Warm-light lamp / Daylight lamp / Filament lamp / Lock white balance
	ROI	8 fixed rectangular regions
	OSD	16×16 / 32×32 / 48×48 / 64×64; Lattice
	Privacy masking	4 fixed black areas
	Defog	Supported
ALARMS & ANALYTICS	General alarms	Motion detection; mask alarm
	Exception alerts	IP address conflict; network disconnection
	Alarm linkage	Notify surveillance centre
	Video analytics	Tripwire; perimeter
	Behaviour rules	2 rules in 1 scene
NETWORK & INTERFACE	Protocols	RTSP; HTTP; HTTPS; TCP; UDP; UPnP; ICMP; DHCP; DNS; DDNS; NTP; TLS v1.2; QoS; IPv4; SSH; Unicast
	Compatibility	ONVIF Profile S/T; SDK; CGI; Milestone
	Remote connections	Up to 2
	Client software	Secureye CMS
	Supported browsers	IE 10+; Firefox 52+; Edge 89+; Safari 11+; Chrome 57+
	Ethernet	1 × RJ-45, 10/100 Base-T
	Audio	1 × built-in microphone
GENERAL & PHYSICAL	Web client languages	19 languages: Simplified Chinese, Traditional Chinese, English, Spanish, Korean, Italian, Turkish, Russian, Thai, French, Polish, Dutch, Hebrew, Arabic, Vietnamese, German, Ukrainian, Portuguese and Albanian
	Operating temperature	-30°C to 60°C (-22°F to 140°F)
	Operating humidity	≤95% RH
	Storage temperature	-30°C to 60°C (-22°F to 140°F)
	Storage humidity	10%–95% RH, non-condensing
	Power input	12 V DC ±25%, max. 6.5 W; PoE IEEE 802.3af, max. 7 W
	Surge Protection	4000 V; ESD 6000 V; IP67
	Camera dimensions	164 (L) × 73 (W) × 73 (H) mm
	Gross weight	0.3KG

Dimensions in mm:

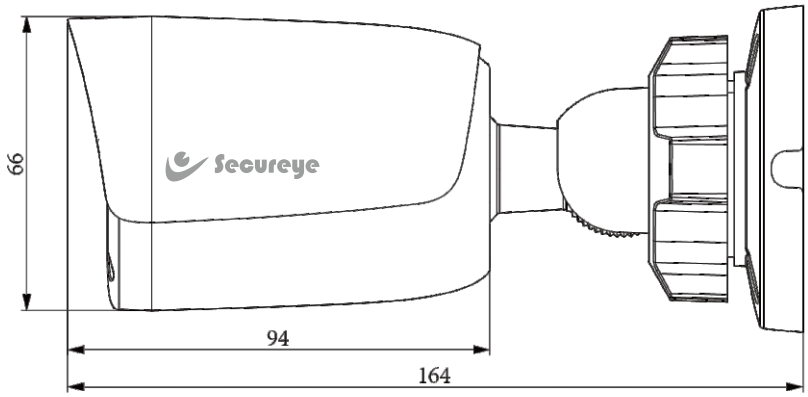

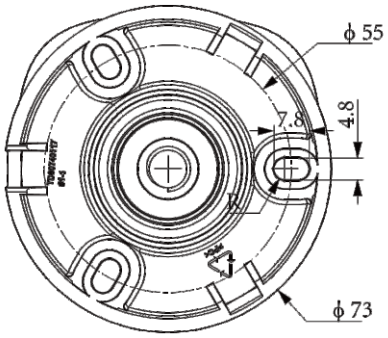

Assembly Junction Box:



