Secureye

DATASHEET

2MP Network DOME CAMERA



SP-C2XN-I3WST

Wide-angle dome monitoring for indoor use

2MP network dome camera that combines detailed high-resolution video with a broad viewing angle, 30 m IR coverage and on-board audio for everyday security applications.

Features

- Full HD imaging at 1920 × 1080 and up to 30 fps
- IR night viewing up to 30 m, supported by two IR LEDs
- Built-in microphone and two white LEDs with up to 15 m reach
- Metal-and-plastic housing
- Supports S+265, H.265 and H.264-family compression
- 12 V DC or IEEE 802.3af PoE power options

	SPECIFICATION	
CAMERA & LENS	Image sensor	1/2.7" CMOS
	Minimum illumination	Colour: 0.02 lux @ F1.6 (AGC ON); B/W: 0 lux with IR
	Shutter speed	1 s to 1/100,000 s
	Day/night mode	Auto-switching IR-cut filter (ICR)
	Smart IR	Supported
	Wide dynamic range	DWDR
	Signal-to-noise ratio	>39 dB
	Pan / tilt / rotation	0–340° (P); 0–75° (T); 0–360° (R)
	Lens design	Fixed focal length
	Focal length	2.8 mm
	Lens mount	M12
	Aperture	F1.6, fixed
	Field of view	103.6° (H); 58.7° (V); 116.2° (D)
	DORI Detect	38.6 m
	DORI Observe	15.3 m
	DORI Recognize	7.7 m
	DORI Identify	3.8 m
IMAGE & VIDEO PROCESSING	Maximum resolution	2 MP, 1920 × 1080 @ 30 fps
	Main stream (PAL)	25 fps (1920 × 1080, 1280 × 720, 640 × 480, 704 × 576)
	Main stream (NTSC)	30 fps (1920 × 1080, 1280 × 720, 640 × 480, 704 × 480)
	Sub stream (PAL)	25 fps (704 × 576, 704 × 288, 640 × 360, 352 × 288)
	Sub stream (NTSC)	30 fps (704 × 480, 704 × 240, 640 × 360, 352 × 240)
	BLC	Supported

	HLC	Supported
	AGC	Supported
	3D digital noise reduction	Supported
ILLUMINATION & COMPRESSION	IR LEDs	2
	IR illumination distance	Up to 30 m
	IR wavelength	850 nm
	White LEDs	2
	White-light distance	15 m
	Video compression	S+265 / H.265 / H.264B / H.264M / H.264H
	Video bit rate	32 kbps to 6 Mbps
	Audio compression	G.711A / G.711U / ADPCM_D
	Audio sampling	8 / 32 / 48 kHz
IMAGE CONTROLS	White balance	Auto / Semi-auto / Manual / Sunshine / Nature light / Warm-light lamp / Daylight lamp / Filament lamp / Lock white balance
	ROI	8 fixed rectangular regions
	OSD	Additional characters in 1 region, 1 line, up to 48 characters; 16 × 16 / 32 × 32 / 48 × 48; Lattice
	Privacy masking	4 fixed black areas
	Defog	Supported
ALARMS & ANALYTICS	General alarms	Motion detection; mask alarm
	Exception alerts	IP address conflict; network disconnection
	Alarm linkage	Notify surveillance centre
	Video analytics	Tripwire; perimeter
	Behaviour rules	2 rules in 1 scene
NETWORK & INTERFACE	Protocols	RTSP; HTTP; HTTPS; TCP; UDP; UPnP; ICMP; DHCP; DNS; DDNS; NTP; TLS v1.2; QoS; IPv4; SSH; Unicast
	Compatibility	ONVIF Profile S/T; SDK; CGI; Milestone
	Remote connections	Up to 2
	Client software	Secureye CMS
	Supported browsers	IE 10+; Firefox 52+; Edge 89+; Safari 11+; Chrome 57+
	Ethernet	1 × RJ-45, 10/100 Base-T
	Audio	1 × built-in microphone
GENERAL & PHYSICAL	Web client languages	19 languages: Simplified Chinese, Traditional Chinese, English, Spanish, Korean, Italian, Turkish, Russian, Thai, French, Polish, Dutch, Hebrew, Arabic, Vietnamese, German, Ukrainian, Portuguese and Albanian
	Operating temperature	−30°C to 60°C (−22°F to 140°F)
	Operating humidity	≤95% RH
	Storage temperature	−30°C to 60°C (−22°F to 140°F)
	Storage humidity	10% to 95% RH, non-condensing
	Power input	12 V DC ±25%, max. 6.5 W; IEEE 802.3af PoE, max. 7 W
	Surge Protection	4000 V; ESD 6000 V
	Camera dimensions	117 (L) × 117 (W) × 96 (H) mm
	Gross weight	0.35 kg

Dimensions in mm:

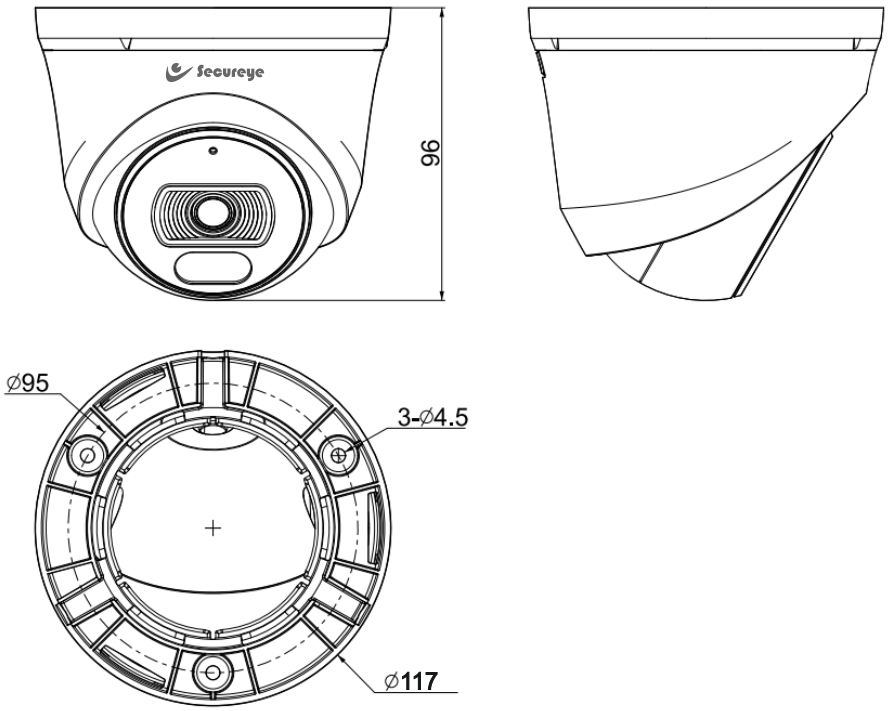

Assembly Junction Box:

